Hip And Valley Rafter Sections

Drawing 4.2.1.2a

Scale 1: 5

Valley

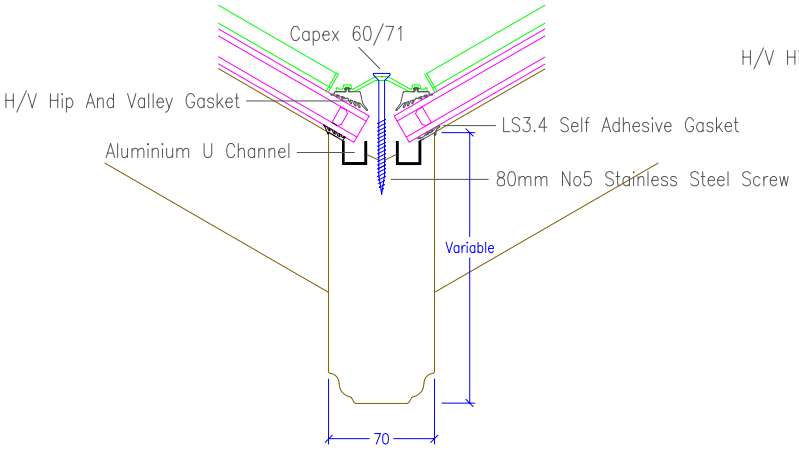

Half Valley

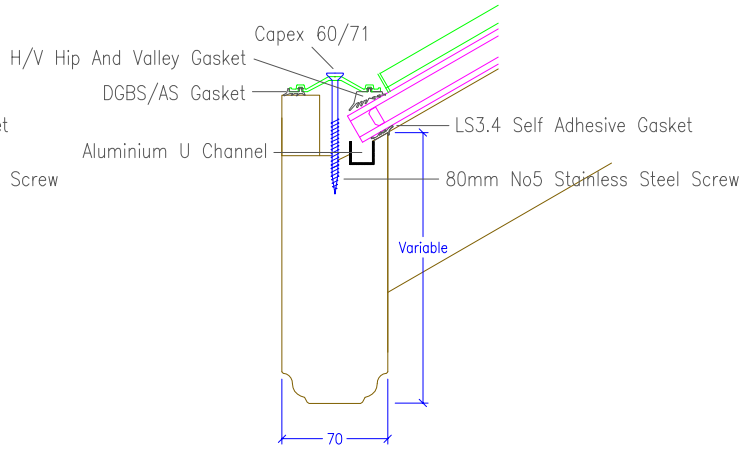
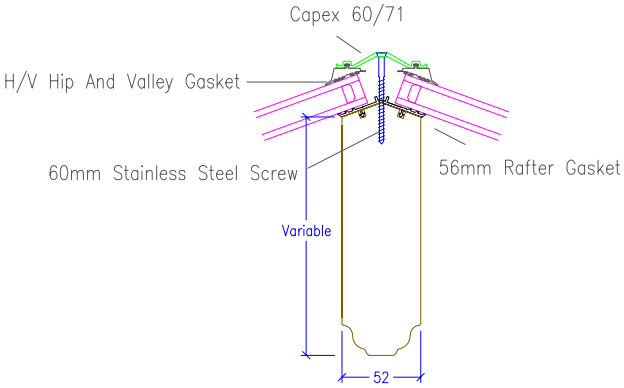
Hip